DF4/P - Lincat Silverlink 600 Propane Gas Counter-top Single Tank Fryer - 2 Baskets - W 450 mm - 10.5 kW

The Silverlink 600 Gas Single Tank Counter Top Fryer delivers 25kg of chips per hour, while it also features a twin basket operation which gives you the flexibility of cooking different foods or loads simultaneously.

- Single tank fryer with twin basket operation giving you the flexibility to cook different foods or loads simultaneously, delivering 25kg of chips per hour
- Front mounted controls for safety
- Thermostatically controlled to give accurate cooking temperatures throughout cooking. Flame failure device and top temperature cut out ensures safe operation.
- Cool zone collects cooking debris - gives cleaner cooking results and saves money by prolonging the life of the oil
- Piezo ignition for easy lighting
- Heavy duty nickel plated baskets for the most demanding of operations
- Front drain off tap for easy removal of cooking oil

Specifications

Summary

Brand	Lincat
Range	Silverlink 600
Power Type	Gas
Gas Type	Propane Gas
Unit Type	Counter-top
Available in UK Only	No
UK Warranty	2 Years Parts and Labour Warranty
Export Warranty	Contact your local dealer
GTIN	5056105104612

Power and Performance

BTU per Hour	35,826
Total Power kW	10.5
Temperature Range °C	110-190
Temperature Control	Mechanical

Key Specifications

Number of Baskets	2
Number of Tanks	1
Gravity Filtration	No
Pumped Filtration	No
Drain Location	Front-mounted

Capacity

Product Output per Hour	16kg chips - 12mm [frozen], 25kg chips - 12mm [chi
Capacity Litres	8.0

Weights and Dimensions

Unit Height (External) mm	415
Unit Width (External) mm	450
Unit Depth (External) mm	654
Net Weight Kg	30.9

Supply Connections

Requires Installation	Yes
Requires Electrical Supply	No
Gas Connection BSP	1/2"
Gas Consumption at full rate Propane m³ per Hour	0.75
Gas Pressure Propane mbar	35.0
Total heat input at full rate Propane kW	10.5
Total heat input at full rate Propane BTU per hour	38,600

Shipping

Packed Weight Kg	43.2
Packed Height cm	63.5
Packed Width cm	70
Packed Depth cm	55

Available Accessories

CH01	Caterflex Hose 1/2" - 1 Metre - for use with units up to 66,000 BTU
CH02	Caterflex Hose 1/2" - 1.5 Metre - for use with units up to 56,000 BTU
CN4	Lincat Silverlink 600 Free-standing Ambient Open-Top Pedestal without Doors - W 450 mm
DC01	DONUT CONV KIT DF4/GAS
SLS4	Lincat Silverlink 600 Free-standing Floor Stand - for units W 450 mm

Technical Picture

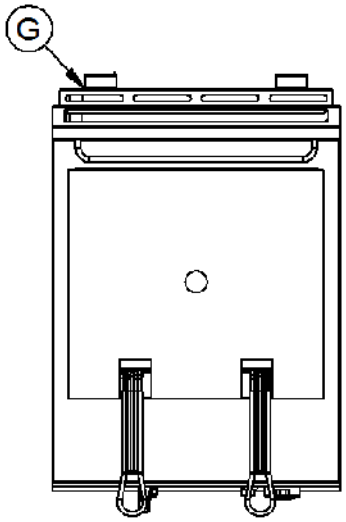

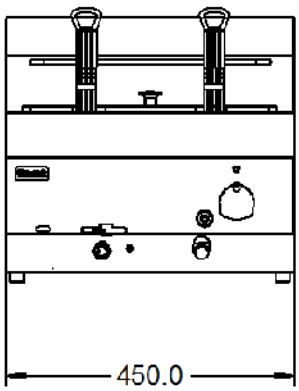

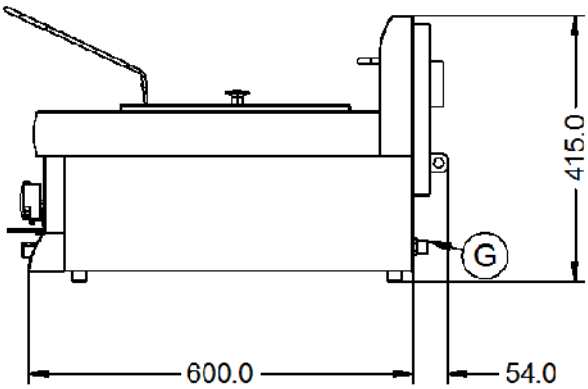

Lincat Limited

Whisby Road,

Lincoln, LN6 3QZ,

United Kingdom

Company No: 2175448

A member company of

THE MIDDLEBY CORPORATION

Customer Care

Tel: +44 1522 875500

Email: care@lincat.co.uk

Export Customers

Tel: +44 1522 875536

Email: export@lincat.co.uk

Opening Hours

Monday – Friday:

8.30am - 5pm